勝 特 力 材 料 886-3-5753170
胜特力电子(上海) 86-21-34970699
胜特力电子(深圳) 86-755-83298787
Http://www.100y.com.tw

1. Scope

This specification prescribes thick film resistors network SINGLE-IN-LINE package for use in electronic system.

2. Designation

2.1 Designation is made in accordance with the following system

LEAVE		PIN／SWITCH		RESISTANCE		TOLERANCE		POWER	
RN		05A		3K30		J		1/4W	
SHOW	STANDARDS	SHOW	STANDARDS	SHOW	STANDARDS	SHOW	STANDARDS	SHOW	STANDARDS
RN	NETWORK	05A	5PIN-A	3K30	3300OHM	J	+/-5%	1/8W	1/8 W
		08B	8PIN-B	1K00	1000OHM	G	+/-2%	1/4W	1/4 W

(1) Normal resistance value :the first two digits are significant figures of resistance value
And the third one denotes the number of zeros following.
EXAMPLE： 300 ：331 ，4.7K ：472
22K ：223 ，100K ：104

(2) Resistance tolerance：
G：±2% J：±5%

3. RATINGS

Rated power be load power corresponding to normal wattage
suitable for continuous use at 70℃ admit temperature

3.1 Derate Curve

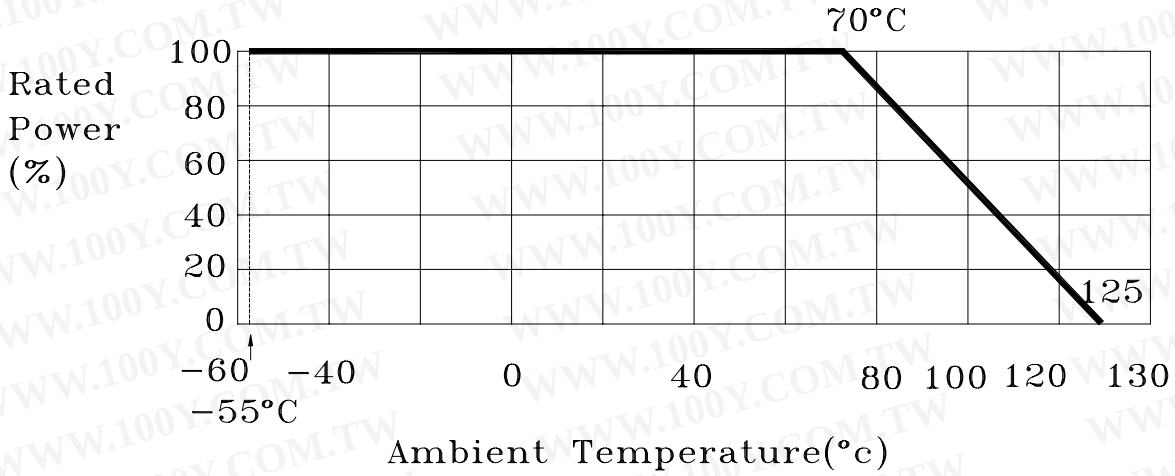

3.2 Operating And Storage Temperature Range-55℃~+125℃

3.3 Rated Voltage

The rated voltage is calculated from the rated power and normal resistance by the following formula：

$$E = \sqrt{RP}$$

Where E：Rated Voltage(V)

P：Rated Power (W)

R：Normal Resistance(Ω)

In case the value calculated by the formula exceeds the maximum work voltage as 3.1 the maximum working voltages shall be regarded as rated.

3.4 Resistance Range

10Ω ~ 500KΩ E12,E24 ,Series

3.5 Resistance Tolerance

G：(±2%) J：(±5%)

4. Dimensions

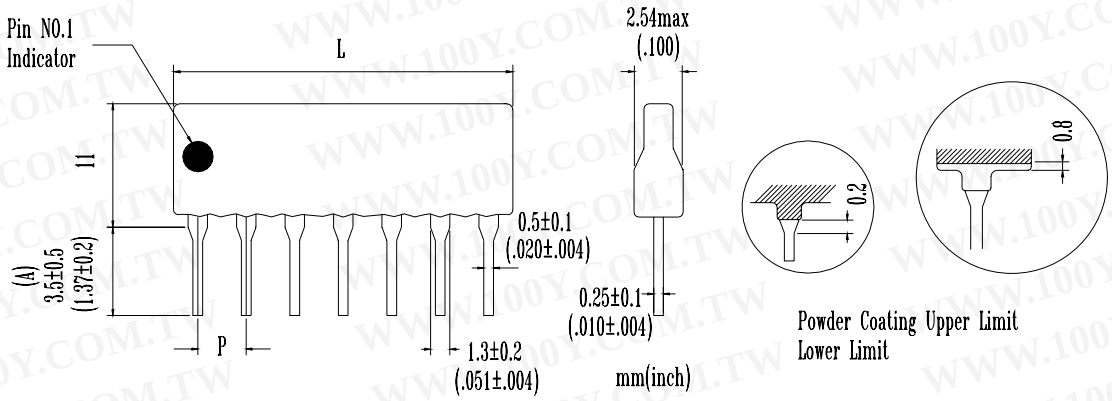

Type	W max. mm(inch)	L max. mm(inch)	P mm(inch)	Pin No	Element No
A	5.08 (.200)	Pin No.x2.54+0.25 (Pin No.x.100+0.010)	2.54±0.2 (.100±.008)	4-12	3-11
B				4-12	2-6

5. Circuit Configuration

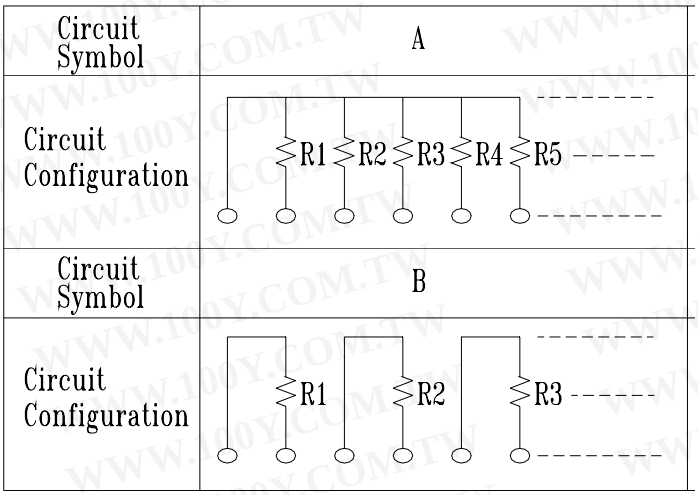

* Customer Designed Resistor Networks Are Available.

6. Characteristics A

6.1 Electrical characteristics test methods

6.1.1 Resistance Value

Measurements of resistance take place by the bridge methods or by use of a measuring instrument Correspond to accuracy its accuracy being fully reliable with respect to tolerances on resistance

6.1.2 Temperature Coefficient of Resistance

In according with 6.1.1 measure initial of resistor network mounted on the test board. Then keep the temperature at each step as following table , hold for 30 minutes after reading a given temperature and measure resistance under the same. The temperature coefficient of resistance calculated form these measured values by the following formula shall be with ±200 PPM/℃(or±100ppm/℃ under requested).

$$\text{Temperature coefficient (PPM /℃)} = \frac{R - R_0}{R} * \frac{1}{t - t_0} * 10^6$$

Where R -Resistance value at tested temperature

R_0 -Initial resistance value

t -Actual measurement of tested temperature

t_0 -Initial temperature

STEP	TEMPERATURE
1	25 ± 5℃
2	-55 ± 5℃
3	25 ± 5℃
4	125 ± 5℃

6.1.3 Short-Time Overload

In accordance with 6.1.1 measure the initial resistor mounted on the test socket, then apply to resistor the voltage corresponding to 2.5 times rate voltage for 5 seconds. However , in case the voltage corresponding to 2.5 times the rated voltage exceeds the maximum overload voltage, the maximum overload voltage shall be regard as test voltage. Eliminated the voltage , leave aside with no load for 30 minutes and then measure resistance under the same condition as in initial-value measurement , at this time , the variation in relation to initial resistance shall be less than±(1%+0.05Ω)

6.1.4 Insulation Resistance

Apply 100V DC voltage across lead and epoxy body for one minute, and then measure insulation resistance with this voltage applied at his time, the insulation resistance shall be over 10,000MΩ.

6.2 Mechanical Characteristics and Test Methods

6.2.1 Terminal Pull Strength

Apply 1 kg pull force on lead and epoxy body for 30 seconds and then measure resistance after releasing force. The resistance variation shall be ±(1%+0.05Ω)maximum and the device shall be no mechanical damage at lead and body joint.

6.2.2 Bending Strength

Apply 500g force on lead and then bend body to right 90 degree holding for 2 seconds and return to original position and then , to left 90 degree and origin position , the device shall be with standing this bending.

6.2.3 Resistance To Soldering Heat

In accordance with 6.1.1 measure the initial value. Dip it in a solder bath at 260℃±5℃, for 10±1 seconds and take out at room temperature. Then leave it aside for about one hour and measure resistance Variation is relation to the initial resistance shall be below ±(1%+0.05Ω).

6.2.4 Solderability

Per MIL-STD-202 method 208 solder bath at 230±5℃ for 5±0.5 seconds. Lead of the device shall be 95% of solder coverage minimum. Dip it in a solder bath at 25.4 mm per second.

6.3 Environment and Life Test

6.3.1 High Temperature Storage

In accordance with 6.1.1 measure the initial resistance value and then , leave it in a oven at 125±5℃for 100^{+5}_{-0} hours. Take it out at room temperature leave aside for 24 hours . And then measure resistance under same condition in relation to the initial resistance shall be below ±(1%+0.05Ω),there being no mechanical damage.

6.3.2 Temperature Cycling

In accordance with 6.1.1 measure the initial resistance value and then repeat five cycles continuously with four steps of temperature cycle as following table. Take it out at room temperature leave aside for one hour and then measure resistance under the same condition as in initial value measurement . At this time variation in relation to the initial resistance shall be below ± (3%+0.05Ω)and the device shall be no damage at feature.

STEP	TEMPERATURE	TIME(min)
1	-40±3℃	30
2	25±5℃	5-10
3	125±3℃	30
4	25±5℃	5-10

6.3.3 Moisture Resistance

In according with 6.1.1 measure the initial resistance value. Then, leave it in a thermal and humidity chamber 40±2℃ and 90-95 % relative humidity with no load for 96±4 hours, take it out at room temperature leave aside for about four hours, and then measure resistance under the same condition as in initial-value measurement, at this time the variation in relation to the initial resistance shall be below ± (5%+0.05Ω).

6.3.4 Operating Life

In accordance with 6.1.1 measure the initial resistance. Then mount device on operating life test socket and apply rated voltage with 1.5 hours , on and 0.5 hour off for 1000 hours . Then, take it out at room temperature for 5 hours , and measure resistance under the same condition as in initial-value measurement , at this time the variation in relation to the initial resistance should be below ± (5%+0.05Ω).

6.3.5 Resistance to solvent

Per MIL-STD-202 method 215B, for three immersions of TRICHLORETHANE 10 stoke by brush with normal hand pressure . The tested resistor network shall be examined to determine marking deterioration.

勝 特 力 材 料 886-3-5753170
胜特力电子(上海) 86-21-34970699
胜特力电子(深圳) 86-755-83298787
Http://www.100y.com.tw